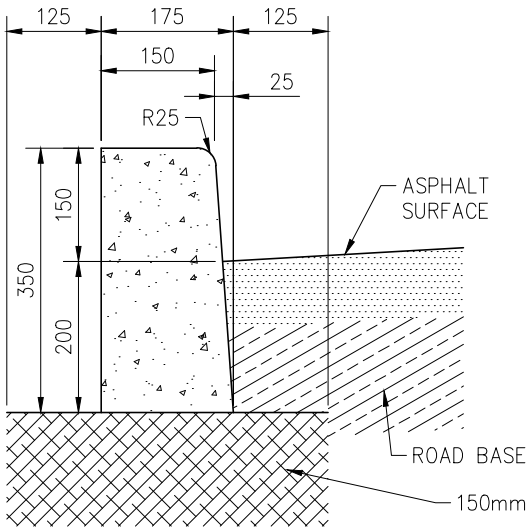

150mm CURB

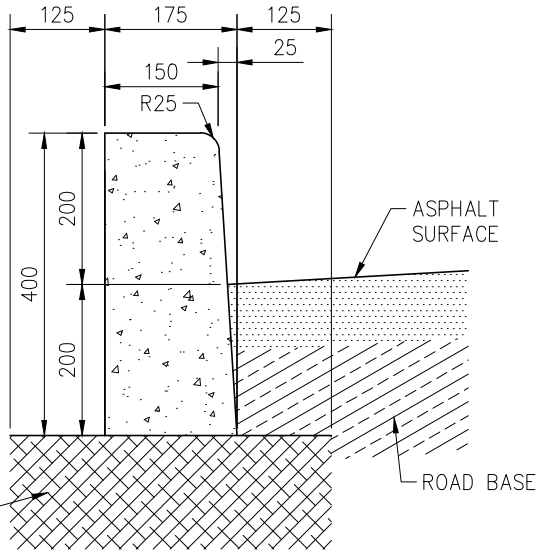

200mm CURB

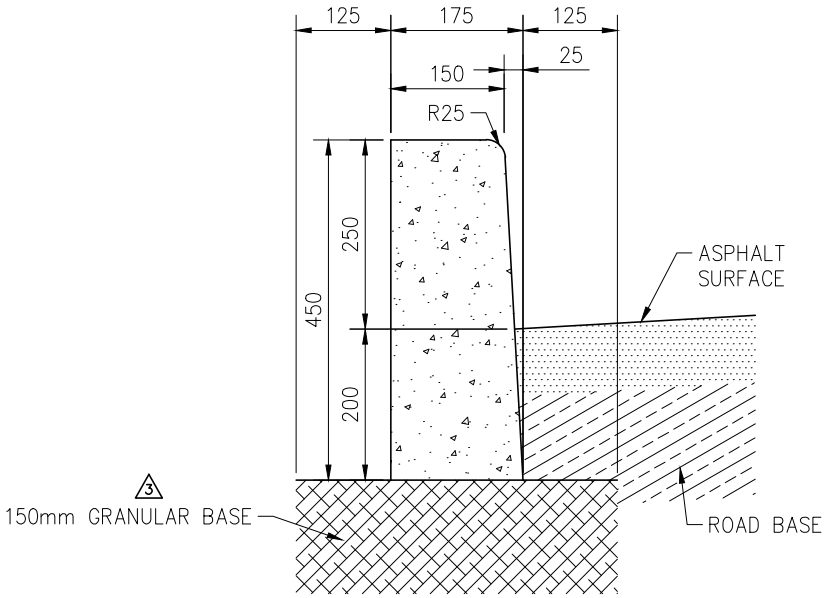

250mm CURB

APPROVED FOR USE AT TRANSIT STOPS

NOTES:

1. CONCRETE STANDARD:
   32 MPa DURA-MIX CONCRETE
   5-8% AIR AS PER SPEC.
2. COMPACTION STANDARD:
   98% STANDARD PROCTOR AS PER SPEC.
3. BROOM FINISH TOP & FACE OF CURB AND GUTTER LONGITUDINALLY.
   BROOM OVER ALL CONTROL JOINTS.
4. SPACING OF CONTROL JOINTS TO BE 1.5M

	PLAN DESCRIPTION/REVISION	DATE	BY
1	ORIGINAL STANDARD DRAWING	1999-FEB-1	RO
2	ADDED 200mm & 250mm CURBS	2020-JAN-31	PRZ
3	UPDATED TO ALIGN WITH SIDEWALK BEST PRACTICES REPORT	2020-OCT-08	DLH

City of Saskatoon

SEPARATE VERTICAL CURBS

APPROVALS

Chris Duriez	
SIGNATURE	SIGNATURE
Christopher Duriez	Maciej Jurkiewicz
NAME	NAME
Jan 25, 2021	Jan 25, 2021
DATE SIGNED	DATE SIGNED

SCALES: HOR. 1:10 VERT. 1:10

PLAN NO. 102-0002-005r003