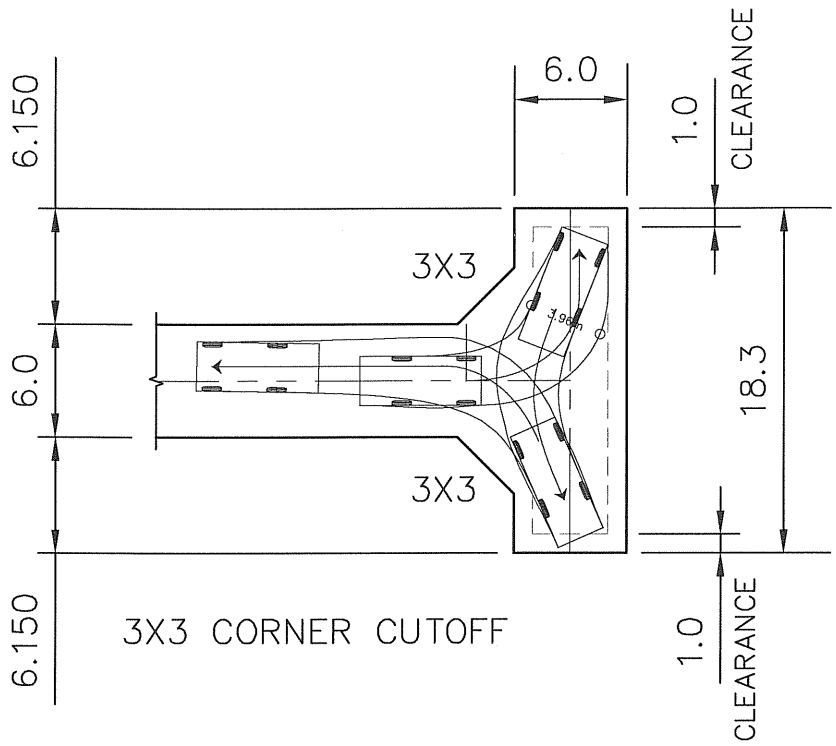

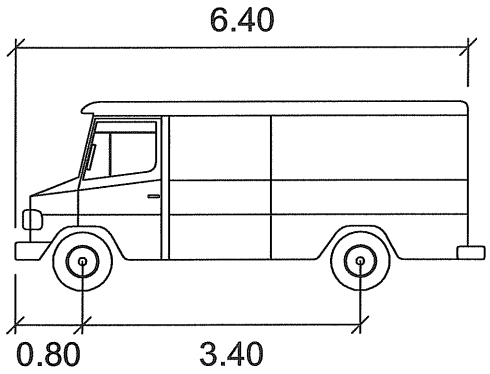

LSU	meters
Width	: 2.60
Track	: 2.60
Lock to Lock Time	: 6.00
Steering Angle	: 40.8

Vd: 1999 TAC (LSU) LIGHT SINGLE UNIT

VEHICLE PATH: ONE STEERING REVERSAL

PLAN DESCRIPTION/REVISIONS	
4	XXX XXX
3	
2	
1	

DRAWN BY LCI

DATE 2010-JAN-12

SCALE : HOR. 1:400 VERT.

City of Saskatoon
Infrastructure Services Department

RESIDENTIAL LANE DEAD-END
TURNAROUND T-TYPE
DESIGN VEHICLE: LIGHT SINGLE UNIT

APPROVED

GENERAL MANAGER

ENGINEER

PLAN NO. 102-0005-004r001

C:\General Projects\Development Standards\1020005004r001_UKN.dwg, 1020005004, 2010/06/15 8:54:08 AM