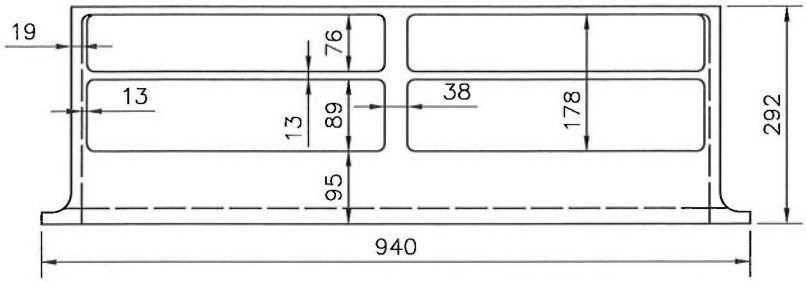

FRONT VIEW

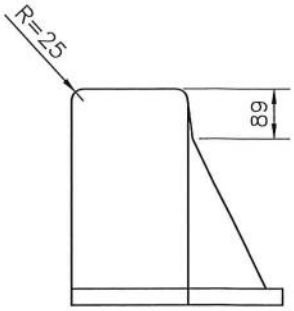

END VIEW

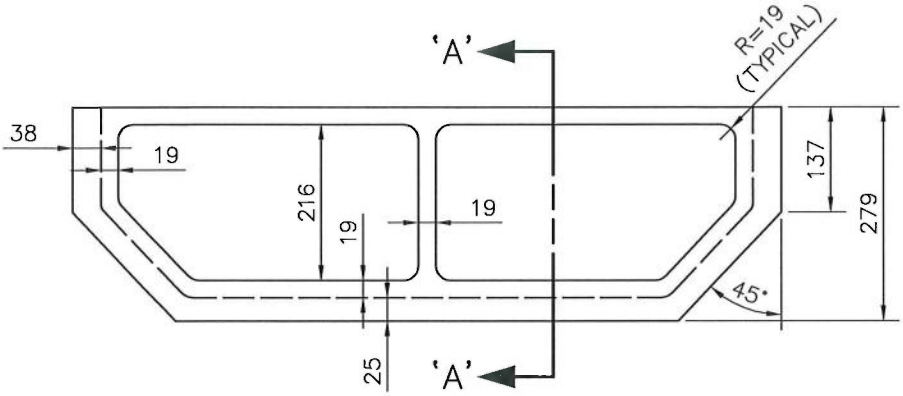

BOTTOM VIEW

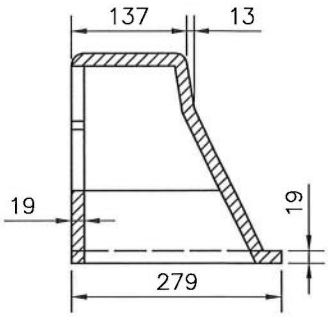

SECTION 'A–A'

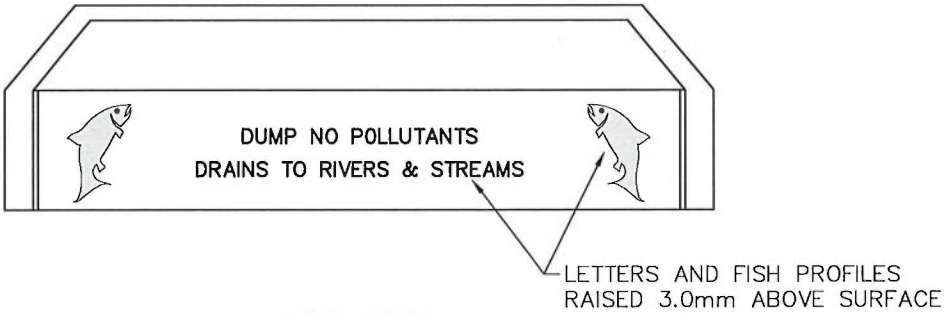

TOP VIEW

MATERIAL SPECIFICATIONS:

(ALL SPECIFICATIONS & STANDARDS REFER TO LATEST EDITION)

- DUCTILE IRON TO CONFORM TO A.S.T.M. A536, GRADE 80–55–06
- MASS = 86 KILOGRAMS ±5%
- COATED CASTING ACCEPTED ONLY WHEN REQUIRED BY CITY.

NOTES:

1. GRATE OPEN AREAS
   FRONT = $0.124m^2$
   BOTTOM = $0.159m^2$

	PLAN DESCRIPTION/REVISION	DATE	BY
1	ORIGINAL STANDARD DRAWING	2020–FEB–11	DLH

City of Saskatoon

CATCH BASIN SIDE INLET
TYPE K–1

APPROVALS

SIGNATURE: Anna Cole — NAME: 18-FEB-2020 — DATE SIGNED
SIGNATURE: Matt Jurkowski — NAME: FEB 20 2020 — DATE SIGNED

SCALES: HOR. N.T.S. VERT. N.T.S.

PLAN NO. 102–0010–020r001