VEHICLE NAME	**E-ONE CYCLONE**
SOURCE LIBRARY: AUTOTURN 10.2	COS CUSTOM VEHICLES
VEHICLE TYPE	FIRETRUCK
CLASS	EMERGENCY
LOCK TO LOCK TIME	6.0 SEC.
STEERING LOCK ANGLE	30.9 DEGREES
UNITS OF MEASURE	METERS
OVERALL VEHICLE LENGTH	10.39
# OF AXLES	2
TRACTOR WIDTH	2.44
MIN. TURNING RADIUS BASED ON CENTERLINE	11.71 @ 90 DEGREES
FRONT OVERHANG	2.34
REAR OVERHANG	2.46

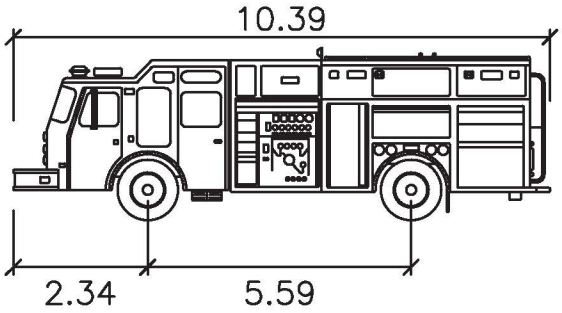

	PLAN DESCRIPTION/REVISION	DATE	BY
1	ORIGINAL STANDARD DRAWING	2020-FEB-13	SJK

City of Saskatoon

DESIGN VEHICLE
FIRETRUCK (E-ONE CYCLONE)

APPROVALS

Chelsea Lanning (Apr 23, 2020)	
SIGNATURE	SIGNATURE
Chelsea Lanning	Matt Jurkiewicz
NAME	NAME
Apr 23, 2020	Apr 30, 2020
DATE SIGNED	DATE SIGNED

SCALES: HOR. N.T.S. VERT.

PLAN NO. 102-0029-049r001